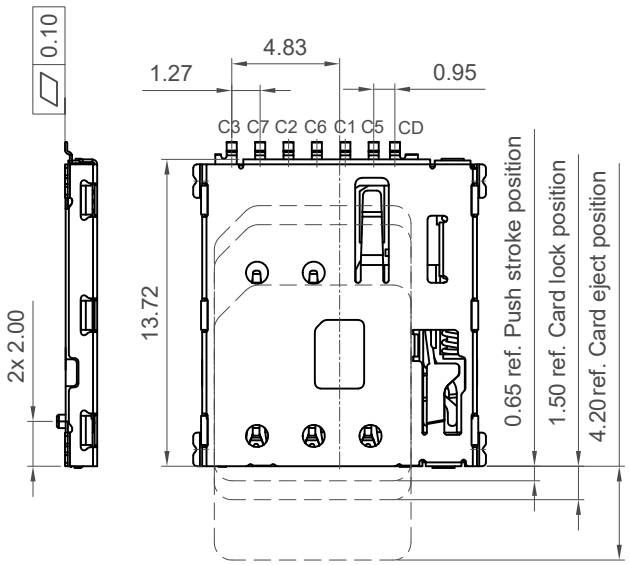

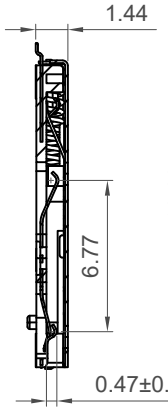

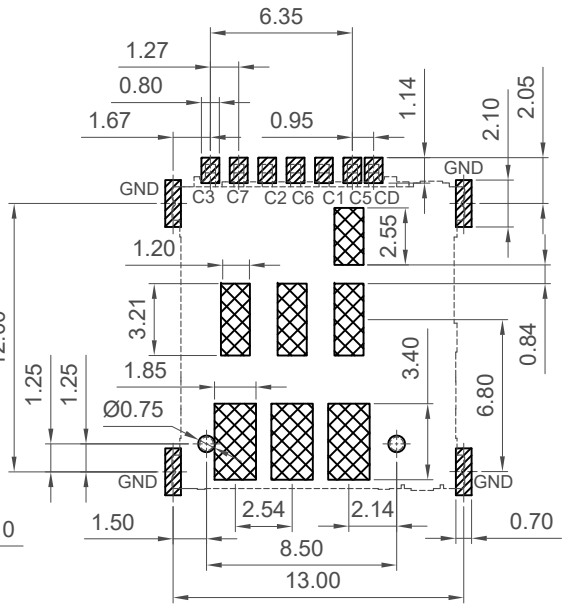

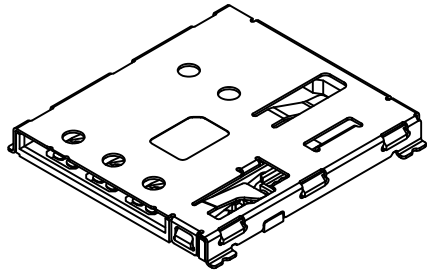

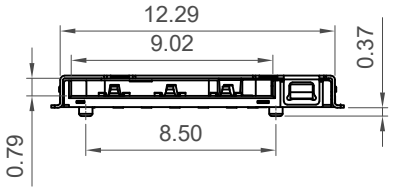

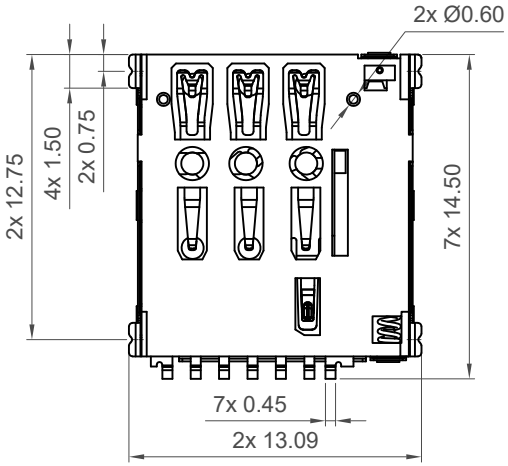

Recommended PCB Layout

(Viewed from Component Side - Tolerance:±0.05mm)

Solder Area Keep Out Area Component Outline

Circuit Diagram for Card Detect Switch	
Card Inserted	Without Card (Normally Close)
GND — CD	GND — CD

Ordering Grid

SIM8066 — 6 — 1 — 14 — 01 — A

Request Samples and Quotation

No. of Contacts
6

Switch
1 = With

Profile Height
14 = 1.44mm

Packing Options
A = Tape & Reel
(1500pcs per reel)

Locating Peg
01 = With

Specifications

Material
- Housing&Slide : High Temperature Thermoplastic, UL94V-0, Black
- Contact Terminal: Copper Alloy
- Metallic Shell: Stainless Steel
- Spring: SWP-B
- Link: Stainless Steel

Plating
- Contact :
  - Contact Area: Gold Flash over Nickel
  - Soldering Tail: Gold Flash over Nickel
- Shell:
  - Soldering Tail: Gold Flash over Nickel
- Spring&Link: Cleaning

Electrical
- Voltage rating: 30V AC/DC
- Current Rating: 1.0 Amp AC/DC Max.
- Contact Resistance:
  - Signal contact: 100 mΩ Max.
  - CD to GND: 200 mΩ Max.
- Dielectric Withstanding Voltage:500V AC (60 Sec Min.)
- Insulation Resistance: 1000 MΩ Min.@500V DC

Mechanical & Environmental
- Operating Temperature: -40°C to +85°C
- Durabillity : 5,000 cycles

Part Number		Product Description					
SIM8066		Nano SIM Card Connector Push-Push Type, SMT, 6Pin, 1.44mm Profile					
Drawing Date							
19th March 2021							
By	CC	Tolerances (Except as Noted) Length	Angle	Units: Metric (mm)	RoHS COMPLIANT 2011/65/EU Deca-BDE	This drawing is confidential and copyright of Global Connector Technology, Ltd (GCT). This drawing must not be copied or disclosed without written consent. E & OE	GCT www.gct.co
Detail	Drawing Release	X.X ± 0.30 X.XX ± 0.20 X.XXX ± 0.10	± 2°	3rd Angle Projection			Not to Scale / Drawn By CC / Sheet No. 1/3
Revision	A2						
Date	15/03/22						

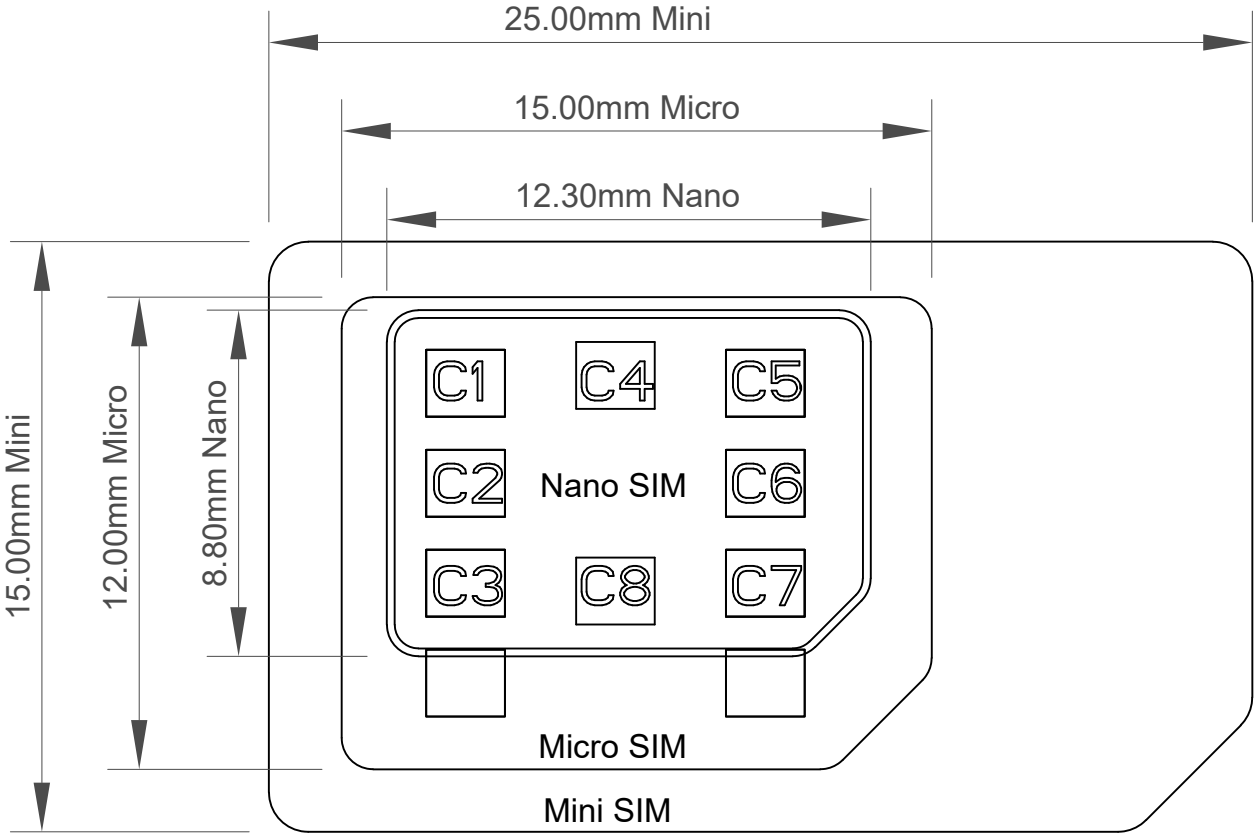

C1----->VCC
C2----->RST
C3----->CLK
C5----->GND
C6----->Vpp
C7----->I/O

Reference

Part Number		Product Description					
SIM8066		Nano SIM Card Connector Push-Push Type, SMT, 6Pin, 1.44mm Profile					
Drawing Date							
19th March 2021							
By	CC	Tolerances (Except as Noted) Length	Angle	Units: Metric (mm)	RoHS COMPLIANT 2011/65/EU Deca-BDE	This drawing is confidential and copyright of Global Connector Technology, Ltd (GCT). This drawing must not be copied or disclosed without written consent. E & OE	GCT www.gct.co
Detail	Drawing Release	X.X ± 0.30 X.XX ± 0.20 X.XXX ± 0.10	± 2°	3rd Angle Projection			
Revision	A2						
Date	15/03/22						

Not to Scale	Drawn By CC	Sheet No. 2/3

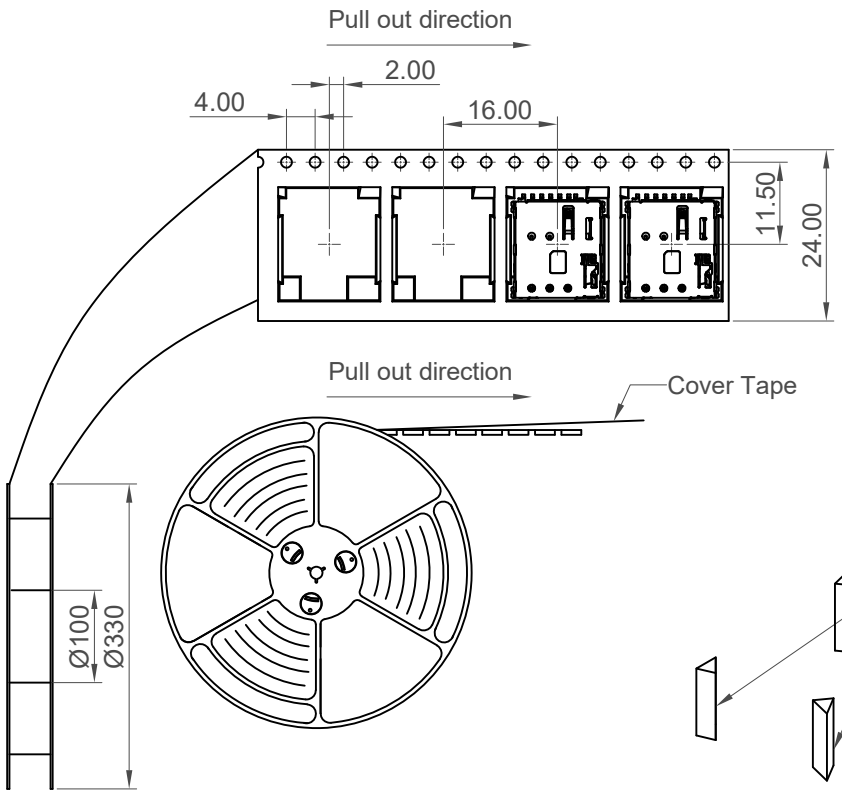

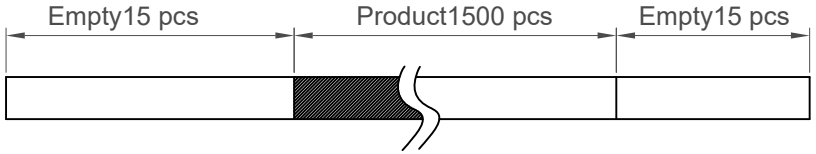

Pcs/Reel	Reels/Carton	Pcs/Carton
1500	10	15000

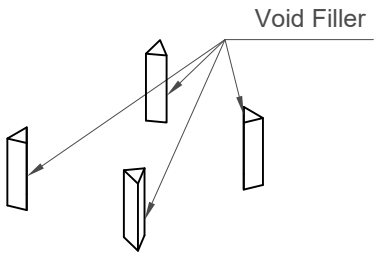

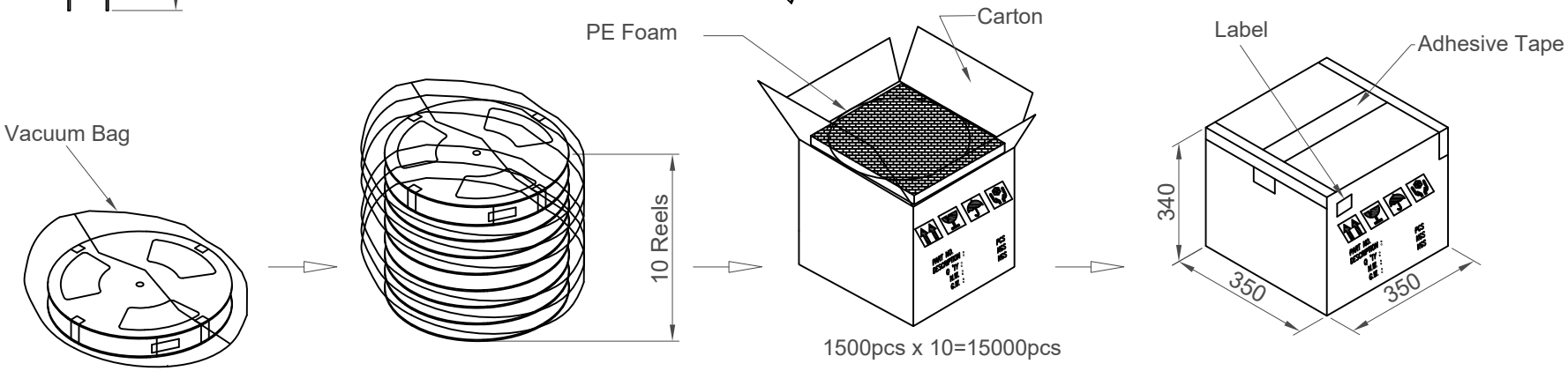

Part Number		Product Description					
SIM8066		Nano SIM Card Connector Push-Push Type, SMT, 6Pin, 1.44mm Profile					
Drawing Date							
19th March 2021							
By	CC	Tolerances (Except as Noted) Length	Angle	Units: Metric (mm)	RoHS COMPLIANT 2011/65/EU Deca-BDE	This drawing is confidential and copyright of Global Connector Technology, Ltd (GCT). This drawing must not be copied or disclosed without written consent. E & OE	www.gct.co
Detail	Drawing Release	X.X ± 0.30 X.XX ± 0.20 X.XXX ± 0.10	± 2°	3rd Angle Projection			
Revision	A2						Not to Scale / Drawn By CC / Sheet No. 3/3
Date	15/03/22						